# BLOCK

## LIT - LIGHT BY OTHERS (LBO)™

# BLK-L-LBO

| DATE | PROJECT | CATALOG # | FIXTURE TYPE |
|---|---|---|---|
| | | | |

## OVERVIEW

BLOCK can do it all. The lightweight structure is crafted entirely from recycled PET acoustic material, utilizing custom cuts and folds meticulously engineered by Sabin. This design ensures full recyclability at the product's end of life. With a production and shipping time as quick as two weeks, BLOCK, both lit and unlit, is a great choice for arrays and cloud configurations within any project constraint.

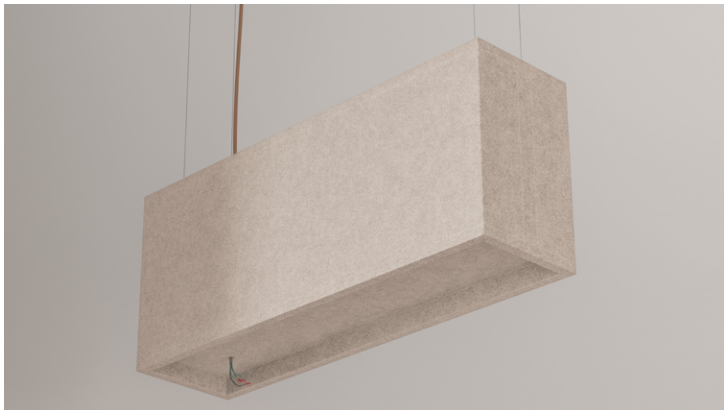

## QUICK FACTS

- Light by Others (LBO)™ enables a customer to integrate their preferred light engine
- Custom heights between 8 - 36 IN
- Optional integration of motion sensors, Wi-Fi, and/or speakers
- NRC rating of .95+

# SPECIFICATIONS

| SERIES | LENGTH/WIDTH[1] | HEIGHT[1] | APERTURE/CORD/STEM DIAMETER[1,4] |
|---|---|---|---|
| BLK-L-LBO | 13" X 13" (321 MM X 321 MM)<br>24" X 13" (621 MM X 321 MM)<br>48" X 13" (1231 MM X 321 MM)<br>24" X 24" (621 MM X 621 MM)<br>48" X 24" (1231 MM X 621 MM)<br>CL__-CW__[2] | 12" (300 MM)<br>24" (600 MM)<br>30" (750 MM)<br>36" (925 MM)<br>CH__[3] | 3/8" (10 MM)<br>1/2" (13 MM)<br>3" (76 MM)<br>4" (102 MM)<br>5" (127 MM)<br>CHD__[5] |

| APERTURE/CORD/STEM LOCATION | FELT COLOR (9 MM) | CORD COLOR[7] | SUSPENSION TYPE |
|---|---|---|---|
| CEN CENTERED<br>OFF OFFSET[6] | 9__ REPLACE "__" WITH DESIRED COLOR CODE FROM SWATCHES | PC__ REPLACE "__" WITH DESIRED COLOR CODE FROM SWATCHES | AC__ 60" AIRCRAFT CABLE + (COLOR CODE)[8]<br>ST__ 60" STRAP + (COLOR CODE)[8]<br>TRD 3/8" THREADED ROD<br>DT DIRECT TO[9] |

| CEILING TYPE | CANOPY[10] | FACTORY OPTIONS[11] |
|---|---|---|
| HC HARD CEILING<br>ST STRUT<br>SG STANDARD GRID<br>TG TEGULAR GRID | RWH ROUND WHITE<br>RBK ROUND BLACK<br>SWH SQUARE WHITE<br>SBK SQUARE BLACK | CSL__ CUSTOM SUSPENSION LENGTH 24"-240"[12,13]<br>CT__ CUSTOM THREAD + (COLOR CODE)[8]<br>2CP INCLUDE 2" CANOPIES[14]<br>FLT SHIP FLAT[15]<br>CF CENTER FEED<br>BABA BABA REQUIRED<br>ATC INCLUDE ATRIUM COVER[16] |

1 IMPERIAL DIMENSIONS ARE NOMINAL. ACTUAL DIMENSIONS ARE METRIC.
2 CUSTOM LENGTHS AND WIDTHS MUST HAVE A PERIMETER 47" - 189" (1200 - 4800 MM) WITH A MINIMUM SIDE LENGTH OF 12" (300 MM).
3 CUSTOM HEIGHTS AVAILABLE BETWEEN 8" - 36" (200 - 925 MM).
4 DIAMETER OF THE HOLE TO ACCOMMODATE DOWNLIGHT/POWER CABLE/STEM.
5 MINIMUM 0.25" (6MM) CUSTOM HOLE DIAMETER.
6 OFFSET NOT AVAILABLE ON SQUARE FIXTURES. SEE DRAWING FOR OFFSET LOCATION.
7 POWER CABLE IS 18" LONGER THAN SUSPENSION LENGTH. CONSULT FACTORY FOR LONGER LENGTHS.
8 REPLACE "__" WITH DESIRED COLOR CODE FROM SWATCHES.
9 DIRECT TO SUSPENSION TYPE ONLY AVAILABLE ON STRUT CEILING TYPE.
10 5" (127 MM) CANOPY PROVIDED FOR FEED.
11 LEAVE BLANK IF NOT APPLICABLE. STRING TOGETHER MULTIPLE SELECTIONS.
12 REPLACE "__" WITH LENGTH OF DESIRED SUSPENSION.
13 PRODUCT HEIGHT + SUSPENSION LENGTH CANNOT EXCEED 295" (7500 MM).
14 2" (50.8 MM) CANOPIES FOR NON-FEED PROVIDED UPON REQUEST. ONLY AVAILABLE FOR CABLE OR STRAP SUSPENSION TYPES.
15 BY DEFAULT, FIXTURES WILL SHIP ASSEMBLED - SHIPPING FLAT WILL REDUCE SHIPPING VOLUME.
16 OPTIONAL ATRIUM COVER CAN BE INCLUDED IF FIXTURES WILL BE VISIBLE FROM ABOVE.

EXAMPLE CATALOG #: BLK-L-LBO-48(1231)-24(621)-24(600)-1/2(13)-CEN-9BS-PCBL-STBF-HC-SWH-FLT-CF-BABA

SABIN

© 2026 SABIN LLC. ALL RIGHTS RESERVED.
CUSTOMIZE AT SABIN.BUILD
DATE REVISED 10.11.2026

5 YEAR WARRANTY · PET · MADE IN THE USA

# COLOR SWATCHES

# BLK-L-LBO

| DATE | PROJECT | CATALOG # | FIXTURE TYPE |
|---|---|---|---|
| | | | |

## FELT

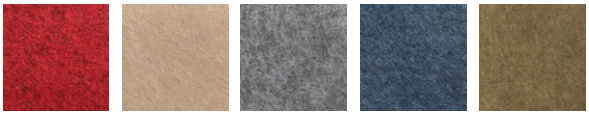

BEETROOT - BT | BIRCH - BH | FLINT - FL | GULF - GF | HAZEL - HZ



MERCURY - MY | MOSS - MO | OBSIDIAN - OB | PINE - PN | PUMICE - PU



QUARRY - QY | SAFFRON - SF | SAND - SD | SAPPHIRE - SP | BISQUE - BS [1]

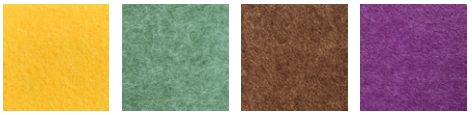

CANARY - CN [1] | JADE - JD [1] | SIENNA - SI [1] | WISTERIA - WS [1]

## AIRCRAFT CABLE

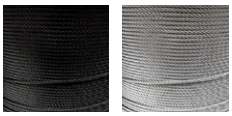

BLACK - BLK | SILVER - SLV

## SUSPENSION STRAP



BLUFF - BF | CITRUS - CI | EMERALD - EM | FERN - FE | FROST - FS

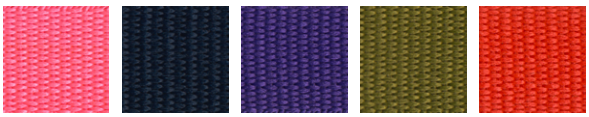

HIBISCUS - HI | INDIGO - IN | IRIS - IR | OLIVE - OL | POPPY - PO

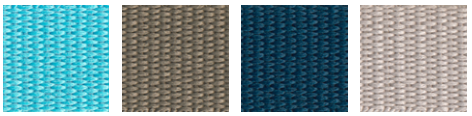

SKY - SK | SLATE - SL | SPRUCE - SU | STONE - ST

## POWER CORD

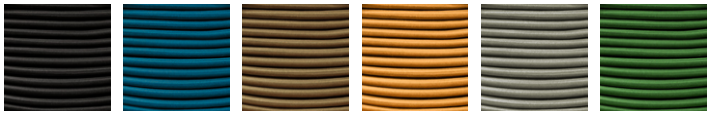

BLACK - BK | BLUE - BL | BRONZE - BR | CLAY - CY | GRAY - GY | GREEN - GR



OLIVE - OL | RED - RD | STONE - ST | TIMBER - TM | WHITE - WH

## THREAD [2]

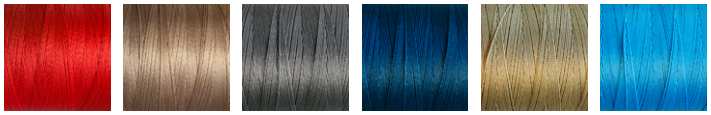

504 // BT | 475 // BH | 415 // FL | 485 // GF | 380 // HZ & QY | 8470 // MY

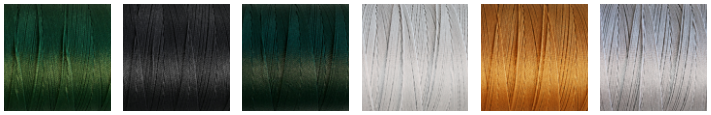

842 // MO | 1452 // OB | 846 // PN | 411 // PU | 177 // SF | 321 // SD



827 // SP | 637 // BS [1] | 8964 // CN [1] | 8973 // JD [1] | 175 // SI [1] | 7377 // WS [1]



70115 [1] | 416 [1] | 163 [1] | 8834 [1] | 8186 [1] | 7463 [1]

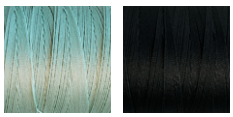

1095 [1] | 4000 [1]

1 ONLY BY SPECIAL ORDER AFTER JAN 1ST 2027.
2 BY DEFAULT, THREAD COLOR WILL MATCH SPECIFIED FELT SELECTION. DEFAULT MATCHES INDICATED BY GREY TEXT FOLLOWING THREAD CODE.
* COLORS ARE SUBJECT TO SLIGHT VARIATION FROM YOUR SCREEN OR PAPER TO THE FINISHED PRODUCT.

SABIN

© 2026 SABIN LLC. ALL RIGHTS RESERVED.
CUSTOMIZE AT SABIN.BUILD
DATE REVISED 10.11.2026

5 YEAR WARRANTY | PET | MADE IN THE USA

# DIMENSIONS

# BLK-L-LBO

| DATE | PROJECT | CATALOG # | FIXTURE TYPE |
|---|---|---|---|
| | | | |

## CENTERED APERTURE/CORD/STEM

TOP

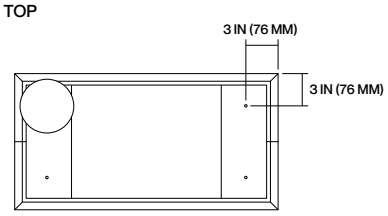


FRONT

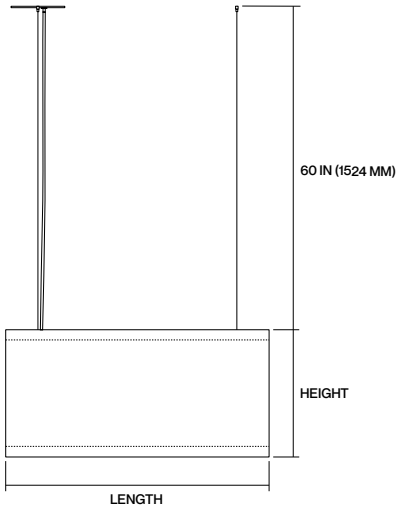


SIDE

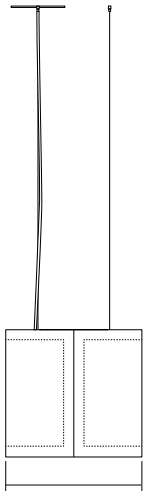


BOTTOM ISO

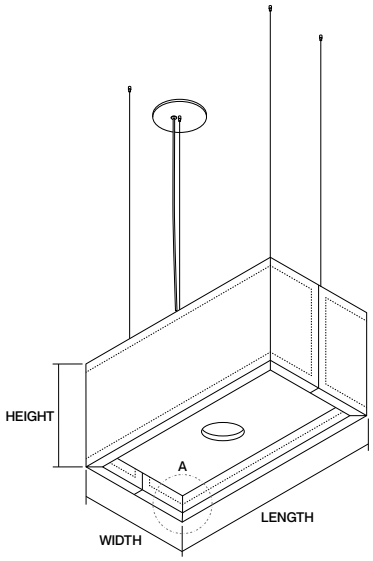


TOP ISO

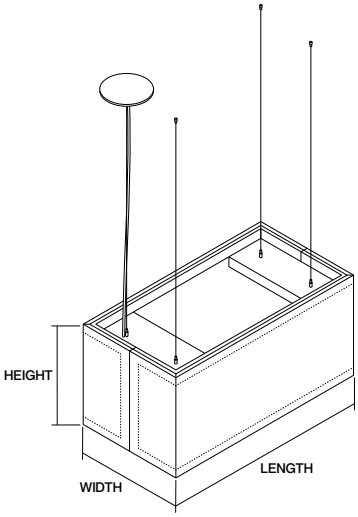


BOTTOM

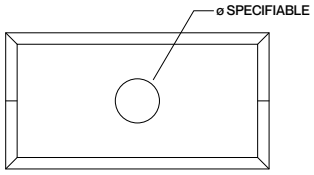


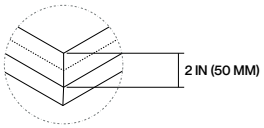


DETAIL A
LIGHT PANEL REGRESSED INTO FIXTURE

1 IMPERIAL DIMENSIONS ARE NOMINAL. ACTUAL DIMENSIONS ARE METRIC.
2 PLEASE CONSULT THE FACTORY FOR WEIGHTS SPECIFIC TO CONFIGURATION.



© 2026 SABIN LLC. ALL RIGHTS RESERVED.
CUSTOMIZE AT SABIN.BUILD
DATE REVISED 10.11.2026

# DIMENSIONS

# BLK-L-LBO

| DATE | PROJECT | CATALOG # | FIXTURE TYPE |
|---|---|---|---|
| | | | |

## OFFSET APERTURE/CORD/STEM

TOP

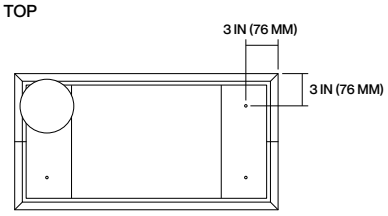


FRONT

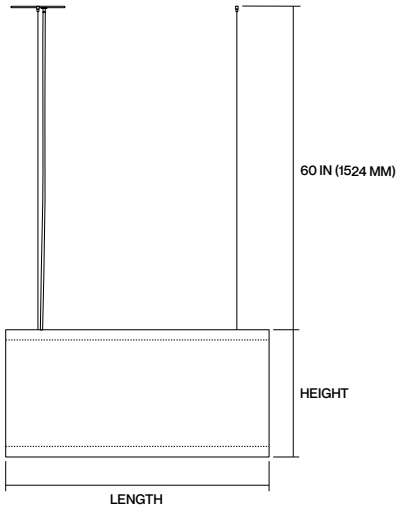


SIDE

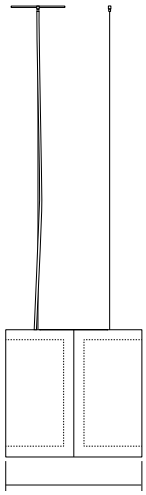


BOTTOM ISO

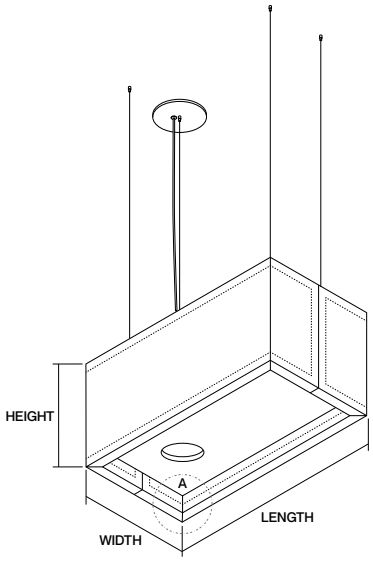


TOP ISO

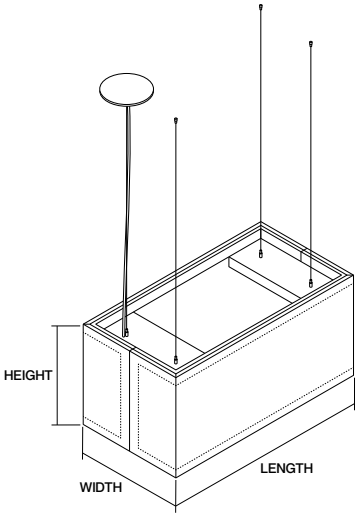


BOTTOM

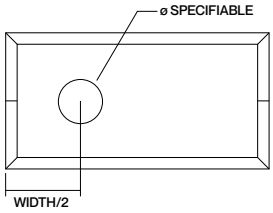


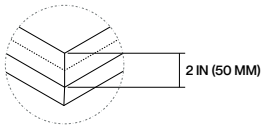


DETAIL A
LIGHT PANEL REGRESSED INTO FIXTURE

1 IMPERIAL DIMENSIONS ARE NOMINAL. ACTUAL DIMENSIONS ARE METRIC.
2 PLEASE CONSULT THE FACTORY FOR WEIGHTS SPECIFIC TO CONFIGURATION.


© 2026 SABIN LLC. ALL RIGHTS RESERVED.

# SUSPENSION TYPES

# BLK-L-LBO

| DATE | PROJECT | CATALOG # | FIXTURE TYPE |
|---|---|---|---|
| | | | |

| | HARD CEILING | STRUT | STANDARD GRID | TEGULAR GRID |
|---|---|---|---|---|
| **AIRCRAFT CABLE**<br>COUPLER<br>60" AIRCRAFT CABLE<br>PRE-INSTALLED GRIPPER | ANCHOR [1] | P1000 STRUT CHANNEL 1 5/8" [1]<br>STRUT NUT WITH STUD | CEILING GRID [1]<br>9/16" OR 15/16"<br>T-BAR OR TWIST CLIP [2] | CEILING GRID [1]<br>TEGULAR CLIP |
| **STRAP**<br>WEBBING SUSPENSION ADAPTER<br>60" STRAP<br>PRE-INSTALLED CAM BUCKLE | ANCHOR [1] | P1000 STRUT CHANNEL 1 5/8" [1]<br>STRUT NUT WITH STUD | CEILING GRID [1]<br>9/16" OR 15/16"<br>T-BAR OR TWIST CLIP [2] | CEILING GRID [1]<br>TEGULAR CLIP |
| **THREADED ROD**<br>3/8" THREADED ROD [1]<br>THREADED ROD ADAPTER<br>PRE-INSTALLED THREADED INSERT | ANCHOR [1] | P1000 STRUT CHANNEL 1 5/8" [1]<br>STRUT NUT WITH SPRING | | |
| **DIRECT TO**<br>PRE-INSTALLED THREADED INSERT | | 1/4"-20 BOLT 4"<br>P1000 STRUT CHANNEL 1 5/8" [1]<br>WASHER | | |

1 NOT PROVIDED
2 CONSULT FACTORY

SABIN

© 2026 SABIN LLC. ALL RIGHTS RESERVED.
CUSTOMIZE AT SABIN.BUILD
DATE REVISED 10.11.2026

5 YEAR WARRANTY · PET · MADE IN THE USA

# ACOUSTIC PERFORMANCE

# BLK-L-LBO

TECHNICAL DATA

| DATE | PROJECT | CATALOG # | FIXTURE TYPE |
|---|---|---|---|
| | | | |

# BLOCK

All sabin products are subject to acoustic testing. Performance values will vary based on installation factors such as density and mounting height.

**SABINS** A sabin is a unit of sound absorption defined as the amount of sound absorbed by one square foot of a perfect absorber. It was initially conceived as the equivalent of 1 square foot of open window, reflecting no sound back into the interior. Sabins are used to express the total effective absorption for the interior of a room. This chart indicates average sabins per unit at the noted frequencies which represent the typical range of human speech of 200-2500 hz.

**NRC** Noise reduction coefficient (NRC) is a single number value ranging from 0.0 to 1.0 that describes the average sound absorption performance of a material. An NRC of 0.0 indicates the object does not absorb mid-frequency sound energy, but reflects it. An NRC of 1.0 indicates that the sound absorption performance of the material is equal to its surface area (measured in units sabin), or conceptually 100% sound absorption.

Projected NRC = .95

Total sound absorption will vary based on designed product configuration. Sabin tests all products in multiple configurations.

Please contact Sabin or your local agent for more information.

## BLOCK

ACOUSTIC PERFORMANCE

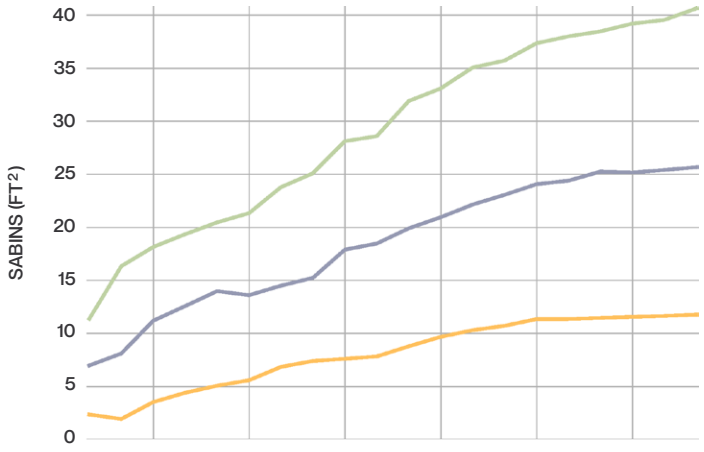


| | 125 Hz | 250 Hz | 500 Hz | 1000 Hz | 2000 Hz | 4000 Hz |
|---|---|---|---|---|---|---|
| L13 W13 H35 | 3.5 | 5.6 | 7.6 | 9.7 | 11.3 | 11.5 |
| L24 W24 H35 | 11.2 | 13.6 | 17.9 | 20.9 | 24.1 | 25.1 |
| L48 W24 H35 | 18.1 | 21.3 | 28.1 | 33.1 | 37.3 | 39.2 |

SABIN

© 2026 SABIN LLC. ALL RIGHTS RESERVED.
CUSTOMIZE AT SABIN.BUILD
DATE REVISED 10.11.2026

5 YEAR WARRANTY · PET · MADE IN THE USA

# NOTES

# BLK-L-LBO

| DATE | PROJECT | CATALOG # | FIXTURE TYPE |
|---|---|---|---|
| | | | |

## ACOUSTIC MATERIAL

Our PET (polyester) felt panels contain minimum 60% post-consumer recycled polyester staple fiber. It is moisture resistant, fire rated, recyclable, and an outstanding absorber of acoustic energy.

- Fire retardant: ASTM E84 Class A, EN13501 Class B
- Construction: 100% polyester fiber (PET)
- Material certifications: OEKO-TEX® Standard 100, SCS Recycled Content, and Declare

## CARE

Acoustic PET felt: Remove dust with compressed air, a vacuum or lint roller. Aluminum & polymer components: Remove dust and debris with a clean, dry, lint-free cloth.

## CERTIFICATES/LISTING

This product is ETL listed and tested to meet UL standards for lit configurations. It complies with NEC and ANSI/NFPA 70 requirements, is RoHS compliant, and rated IP20 for use in dry, indoor locations only. 90 CRI configurations also meet Title 24 JA8-2016 requirements. Additionally, this product is GREENGUARD Gold certified and holds Declare, OEKO-TEX® Standard 100, and SCS Recycled Content certifications.

## CONSTRUCTION

Acoustic luminaire comprised of ≥ 60% recycled PET material utilizing sewn construction to maximize strength, durability, and sound absorbency.

## MOUNTING

Suspended by various methods including 1/16" aircraft cable, straps, grid clips or 3/8" threaded rod (adapters provided, threaded rod by others). Aircraft cable is available in precut lengths of 60" (1524 MM) or custom length from 24" (600 MM) to 240" (6096 MM). For lit units, fabric-covered power cord is provided along with a 5" (127 MM) feed canopy.

## WARRANTY

Fixture rated for operation in conditioned environments up to 77°F (25°C). Fixture is warrantied to be free from defects and/or failure under normal Use and proper storage for five (5) years from date of shipment.




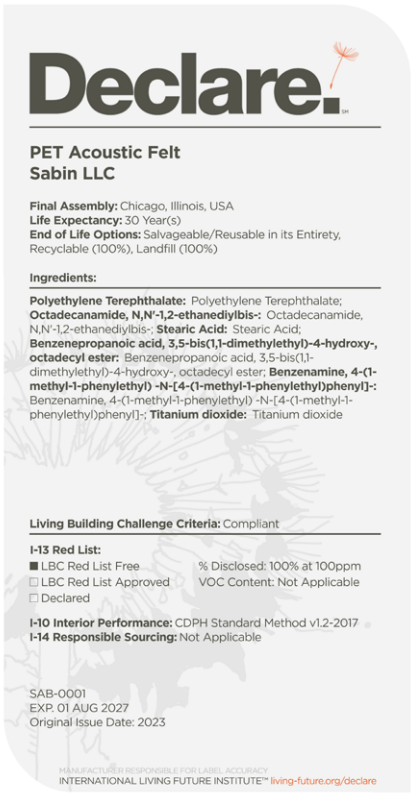


CONSULT FACTORY FOR SPECIFIC PRODUCT CONFIGURATIONS.

SABIN

© 2026 SABIN LLC. ALL RIGHTS RESERVED.
CUSTOMIZE AT SABIN.BUILD
DATE REVISED 10.11.2026