PFX-5553

LED HAZARDOUS LOCATION REMOTE HEAD

STANDARD | OPTIONAL

ILLUMINATION

- Two fully adjustable, ultra bright 3.3 watt high performance MR-16 base LED lamp heads for optimized center-to-center spacing.

ELECTRICAL

- Powered from low voltage 6V/12V DC power source with low voltage wiring (not provided).

MOUNTING

- Die-cast mounting brackets provided for surface wall-mount installation.
- Distance of maximum run is determined by system voltage, wire gauge and total maximum wattage on the run.

HOUSING

- Housing is fiberglass reinforced construction in gray finish.
- Corrosion-resistant enclosure with one piece, high-impact resistant, UV stabilized polycarbonate lens and molded gasket with stainless steel screws.

OPTIONS

- TP: Tamper-proof hardware helps discourage unauthorized access to the unit.

WARRANTY / LISTING

- Five year warranty.
- UL listed with approved Best Lighting.
- Products. IP66 rated for Ingress protection. Meets
- UL924, NFPA 101 Life Safety Code, NEC, OSHA, Local and State Codes.
  Rated for Class 1, Division 2, Groups A, B, C, and D.



DIMENSIONS

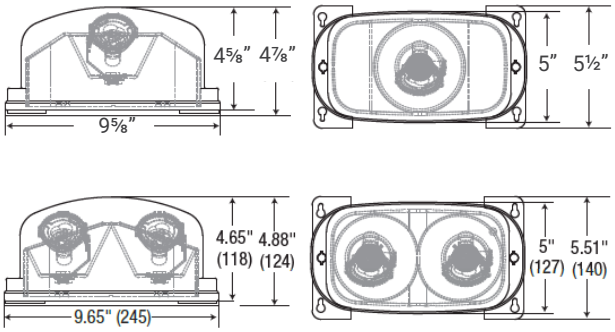

ORDERING GUIDE

Example: PFX-5553-HLRHLED16-1G

MODEL	HEADS	HOUSING COLOR	OPTIONS
PFX-5553 HLRHLED16	**1** Single **2** Twin	**G** Gray	**TP** Tamper-Proof

Disclaimer:
Due to the rapid pace of technology change in the Lighting industry, the Information and Data presented in this spec sheet is for reference purposes only, please confirm with PARAFLEX at the time of finalizing the order or design. PARAFLEX does not warrant or represent that the information is free from errors or omission. The information may change without notice and PARAFLEX is not in any way liable for the accuracy of any information printed and stored or in any way interpreted or used.

973-340-6040
3 Luger Rd. #1 - Denville, NJ 07834
info@paraflex.com
paraflex.com